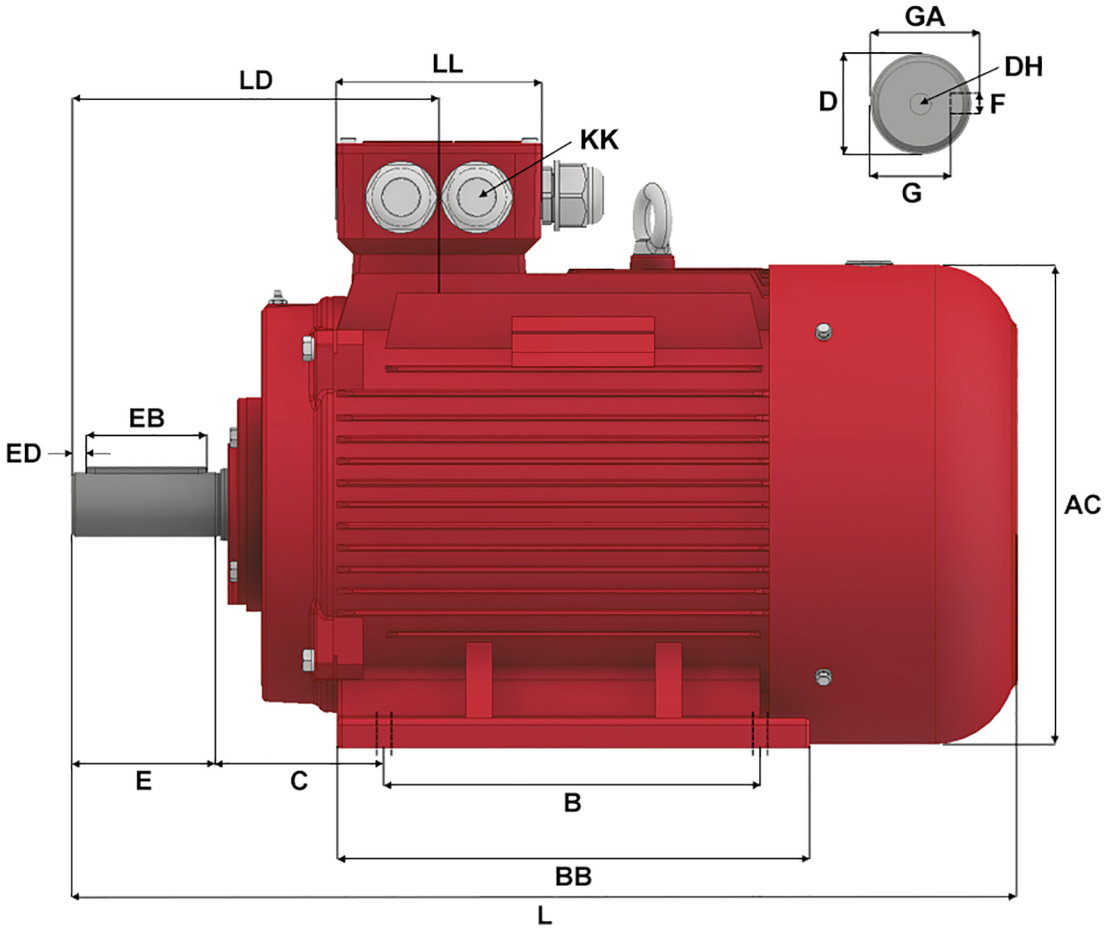

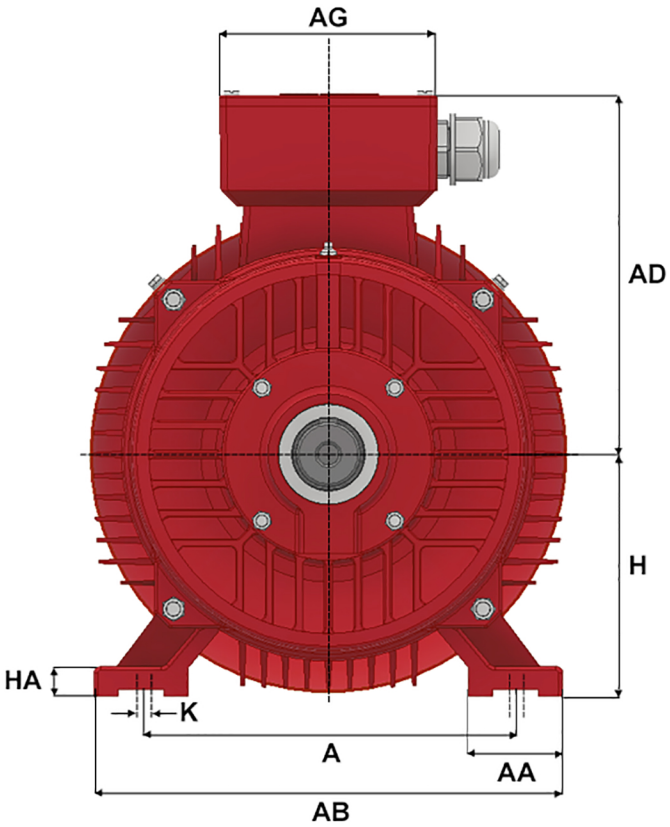

Version: 1JLEM	Revised: 09-11-2019	HP	RPM	FRAME	ENCLOSURE	IJC315L1-6-B3
Customer is responsible in determining that Max Motion product will fit/perform suitably in the intended application		150	1185	315L	TEFC	

A	B	C	D	E	F	G	H	K	L	AA	AB	AC
508	508	216	80	170	22	71	315	4 - Ø 28	1318	120	628	620
AD	**AG**	**BA**	**BB**	**DH**	**EB**	**ED**	**GA**	**HA**	**KK (1)**	**KK (2)**	**KK (3)**	**LD**
527	320	0	680	M20 X 42	160	5	85	45	M63 X 1.5	2'' NPT	M16 X 1.5	427
LL												
280												